Global Journal of Engineering and Technology Advances
eISSN: 2582-5003
Cross Ref DOI: 10.30574/gjeta
Journal homepage: https://gjeta.com/

(RESEARCH ARTICLE)

Check for updates

STRUCTURAL DESIGN AND FINITE ELEMENT ASSESSMENT OF A SUBSEA MANIFOLD LIFTING PADEYE FOR INSTALLATION LOADS: EGINA FIELD CASE STUDY, GULF OF GUINEA

Morrison Inengiyemiema *, Sunday Koko Andrew and Nitonye Samson

Department of Marine Engineering, Rivers State University, Port Harcourt, Rivers State, Nigeria.
* Corresponding Author

ORCID Details
Morrison Inegiyemiema: https://orcid.org/0009-0008-0847-6317
Nitonye Samson: https://orcid.org/0000-0001-9609-925X

Global Journal of Engineering and Technology Advances, 2026, 29(02), 143–154

Publication history: Received on 11 October 2026; revised on 21 November 2026; accepted on 23 November 2026

Article DOI: https://doi.org/10.30574/gjeta.2026.29.2.0329

Copyright © 2026 Author(s) retain the copyright of this article. This article is published under the terms of the Creative Commons Attribution License 4.0

ABSTRACT

Lifting padeyes carry the installation load of a subsea manifold, so their strength must be demonstrated before the lift, yet studies of manifold installation rarely extend to the structural check of the lifting points. This study assesses a cheek-plate reinforced S355 padeye (main plate 15 mm, cheek plates 5 mm, 20 mm pin hole) for the installation of a subsea manifold in conditions representative of the Egina field, offshore Nigeria. The design is based on the maximum tether tension from a separate installation analysis (36,907 N) factored for weight contingency (1.10), consequence (1.35) and dynamic amplification (1.30). In the analytical check, the tensile, bearing and shear stresses were 8.31, 64.76 and 60.88 N/mm^2, equal to 3.9%, 15.2% and 42.9% of the allowable values from AISC-ASD and API RP 2A-WSD, with shear governing. A finite element analysis in Abaqus, with the base fixed and the load applied through a coupled reference point at the pin hole, gave a maximum von Mises stress of 103.3 N/mm^2 at the edge of the pin hole, about 29% of the 355 N/mm^2 yield strength, a stress of 36.10 N/mm^2 at the section between the hole and the base, and a maximum displacement of 0.056 mm. The padeye is adequate for the load applied in the model. The padeye geometry and load factors are assumed design values, and the load basis requires documentation before the result is used for design.

Keywords: Padeye, Lifting point, Subsea manifold, Finite element analysis, Abaqus, Von Mises stress, Gulf of Guinea

1 INTRODUCTION

Subsea production systems make it possible to develop offshore oil and gas fields in deep water. They consist of subsea trees, manifolds, pipelines, risers and control umbilical that gather hydrocarbons from several wells and deliver them to a host facility or an export line [1]. The subsea manifold is a central element of such a system. It is a large structural assembly, placed on the seabed within an array of wells that combines, controls and directs the flow from several wells and, depending on the field, injects water, gas or chemicals [1]. Floating offshore structures, such as FPSOs coupled with mooring lines to the ocean floor (or seabed) experience forces and revolving moments caused by dynamic excitations from environmental elements such as wind, current and waves [2]. Design environmental load conditions can be

referred to as those forces imposed on the structure by the selected design event; whereas, operating environmental load conditions are those forces imposed on the structure by a lesser event which is not severe enough to restrict normal operations [3]. Sometimes vessels with dynamic positioning systems are deployed. Dynamic positioning (DP) is any computer-controlled system that automatically maintains a vessel in a relatively fixed position with respect to the ocean floor. [4] The design of a deepwater manifold has to consider the water depth, the structural strength and the layout of pipes and valves [6].

The installation of a manifold involves lowering a heavy structure from a surface vessel through the water column to the seabed. Waves, currents and vessel motion act on the structure and on the lifting gear during lowering, so the loads in the slings and in the lifting points are higher than the static weight [5], [7]. The Egina field is located offshore Nigeria in licence block OML 130, in water depths of about 1,700 m, and its subsea production system includes six manifold modules [8], [9]. Lifting and installing equipment of this size in ultra-deep water is demanding because of the marine conditions, the long lifting heights and the tooling constraints [9].

A padeye, also called a lifting lug or lift point, is the part that connects the lifting equipment, such as a shackle or a sling, to the structure being lifted. It transfers the load from the rigging to the structure and has to stay stable and intact during the lift [10]. Three configurations are commonly described. The plate padeye is a single steel plate welded to the structure with a circular hole for a shackle pin, and it is used for moderate loads. The trunnion padeye uses cylindrical shafts that protrude from the structure and is used for very heavy modules and for lifts where controlled rotation is needed. The cheek-plate reinforced padeye has extra plates welded on both sides of the main plate, which spread the load more evenly, reduce the stress concentration around the hole and increase the effective thickness at the hole [10]. Reinforced padeyes are frequently used for heavy subsea structures such as manifolds and templates [10].

The design of a padeye depends on the lifting load, the sling angle, the material, the weld capacity and the interaction with the lifting hardware [8]. The lifting load includes the weight of the structure and an allowance for dynamic effects from crane acceleration, vessel motion and environmental conditions, which is why design loads include safety factors [11]. When the sling is inclined to the vertical, the load has a horizontal component as well as a vertical one, and both have to be considered [10]. The usual checks cover tensile stress in the plate, bearing stress between the pin and the hole, and shear stress between the hole and the base, with the highest stresses expected near the hole and at the weld to the supporting structure [10], [11]. Finite element analysis is widely used to examine the stress distribution at the hole, which simple formulas cannot resolve [10], [11].

Published work on manifold installation has addressed mainly the global behaviour of the lifted system. Wang et al. simulated the installation of a cluster manifold with drill pipe in OrcaFlex and showed that manifold weight and environmental conditions control the tension, bending moment and displacement of the drill pipe [12]. Li et al. studied the controllability of a manifold during pendulous installation [13]. Pestana et al. and Nam et al. used wave-basin model tests to estimate operational windows and to measure vessel motion and wire tension during lifting and lowering [5], [14]. Liu and Wang evaluated an installation method designed to avoid resonant responses [15], Ullah et al. modelled the multibody dynamics of the Y-method installation system [16], and de Andrade et al. reviewed the modelling of subsea lifting operations [7]. These studies describe the motion of the vessel, the lifting line and the structure, but they do not carry the analysis through to the structural check of the individual lifting points.

Padeye-specific studies are fewer. Soh and Soh compared two-dimensional finite element models of lifting padeyes with a three-dimensional solution to find a two-dimensional model suitable for practical design, and observed that padeyes designed by traditional methods tend to be over-designed [17]. Zhou et al. proposed a check method for lifting padeyes based on frictionless cylindrical contact theory and compared it with finite element results and a traditional check formula [18]. Liu et al. analysed how stress and deformation in a lifting padeye vary with external force and hoist angle, and developed optimum design models to reduce steel cost [10]. Ali and Fadillah analysed the lifting strength of a padeye on a 23.02 t subsea structure with the finite element method [11]. These works treat the padeye as a general offshore component. In the sources reviewed here, none sizes a manifold padeye from an installation load established for a Gulf of Guinea field and checks the same padeye with both hand calculation and finite element analysis. This is the gap addressed in this paper.

The aim of this paper is to assess the structural adequacy of an offshore lifting padeye for the installation of a subsea manifold in conditions representative of the Egina field. Two objectives are addressed: (1) to design the padeye and assess its structural performance under the factored installation load, by checking the tensile, bearing and shear stresses against allowable values; and (2) to carry out a finite element analysis of the padeye in Abaqus to determine the von Mises stress, the displacement and the stress distribution. The installation load is taken from a separate tether analysis of the manifold, which gave a maximum tension of 36,907 N, and it is used here only as an input.

2 METHODS AND MATERIAL

2.1 Case Description and Design Basis

The case is a lifting padeye on a subsea manifold of 4,000 kg that is lowered from a crane vessel in conditions representative of the Egina field. The manifold is lifted by four slings connected to four padeyes at the corners of the frame (Fig. 1). The design is for the lifting and lowering stages only. Fabrication, transportation, in-service loading, weld design and fatigue are outside the scope. Information specific to the Egina field is limited to its location and depth [8], [9]. The padeye geometry, the material grade and the load factors in Tables 1 to 3 are the design inputs and they are treated here as assumed design parameters.

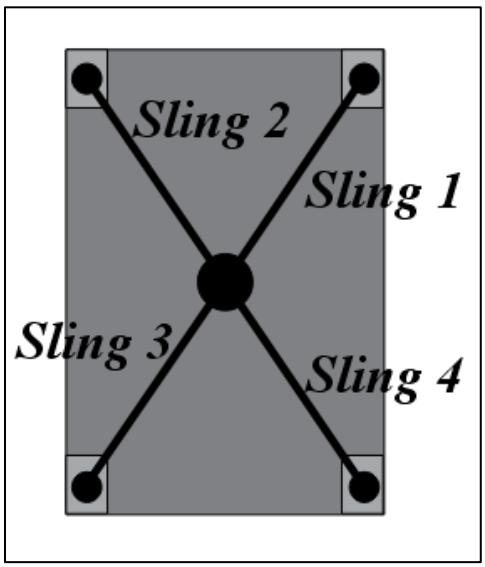

Figure 1: Top view of the manifold showing the four slings and padeyes.

Padeyes, shown in Figure 2, are also known as lifting lugs or lift points. They are structural parts used to connect lifting equipment such as shackles, hooks, or slings to heavy components during lifting and installation

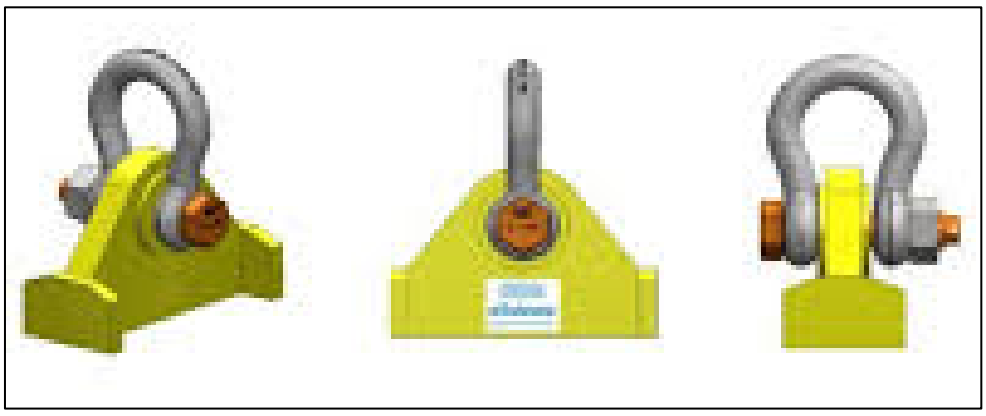

Figure 2: Offshore Lifting Padeye with Shackle Connection (Liu et al., 2013)

2.2 Padeye Material

The padeye is made of structural steel EN 10025 S355 [19]. The elastic properties used are given in Table 1. The shear modulus of 79,600 N/mm^2 is consistent with the Young's modulus of 207,000 N/mm^2 and Poisson's ratio of 0.3 through $G = E/[2(1 + \nu)] = 79{,}615$ N/mm^2. The yield strength of the main plate and of the cheek plates was taken as 355 N/mm^2. The standard gives the minimum yield strength as 355 N/mm^2 for nominal thickness up to 16 mm, 345 N/mm^2 above 16 mm up to 40 mm, and lower values for greater thickness, and the minimum tensile strength as 470 to 630 N/mm^2 [19].

Table 1: Padeye material properties, S355

Property	Value	Unit
Young's modulus, E	207,000	N/mm^2
Shear modulus, G	79,600	N/mm^2
Poisson's ratio, ν	0.3	–
Density, ρ	7,850	kg/m^3
Yield strength, F_y (main and cheek plates)	355	N/mm^2
Minimum tensile strength	470–630	N/mm^2

2.3 Padeye Geometry

The padeye is a cheek-plate reinforced design (Fig. 2). It has a main plate with a rounded top and a straight base, and a circular cheek plate welded on each side around the pin hole.3The dimensions are in Table 2. The pin hole has a diameter of 20 mm and the pin diameter is 19 mm.

Table 2: Padeye geometric data

Description	Data
Main Plate Radius (Rm)	50 mm
Main Plate Thickness (tp)	15 mm
Cheek Plate Radius ($\mathbf{R_{ch}}$)	35 mm
Cheek Plate Thickness ($\mathbf{t_{ch}}$)	5 mm
Pin Hole Radius(Rh)	10 mm
Pin Diameter (Øp)	19 mm
Height of Padeye (Hp)	120 mm
Length of Padeye (Lp)	148.15 mm
Distance from hole center to padeye base ($\mathbf{C_p}$)	70 mm
Padeye Angle (Ø)	60 deg.

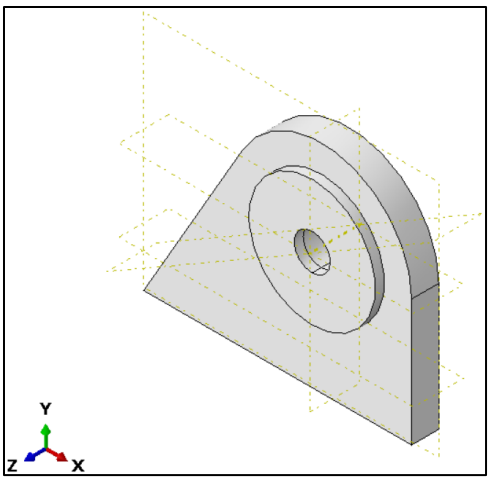

Figure 3: Three-dimensional Abaqu model of the cheek-plate reinforced padeye.

2.4 Design Load

The maximum tether tension from the installation analysis of the manifold, 36,907 N, is the basis of the design load. It is increased by three factors (Table 3): a weight contingency factor of 1.10, a consequence factor of 1.35 and a dynamic amplification factor of 1.30. Their product is 1.1 × 1.35 × 1.3 = 1.9305, so the factored value of the tether tension is 71,249 N. The load that reaches one padeye depends on how the factored load is shared between the four slings and on the sling angle. The load components used in the finite element analysis are given in Section II

Table 3: Load Factors

Load Factor	Symbol	Value
Weight Contingency Factor	WCF	1.10
Consequence Factor	CF	1.35
Dynamic Amplification Factor	DAF	1.30
Skew Load Factor (4-Point Lift)	SKL	1.10
CoG Uncertainty Factor	CoG_u	1.05
Crane Lift Factor	CL	1.05
Total Load Factors	LF_t	2.341

2.5 Analytical Stress Checks

The force F transmitted by the sling acts on the pin at an angle to the vertical. It is resolved into vertical and horizontal components using the sling angle θ measured from the vertical:

$$F_v = F\cos\theta \quad (1)$$

$$F_h = F\sin\theta \quad (2)$$

where F_v and F_h are the vertical and horizontal components (N). The vertical component is assumed to produce tension in the padeye plate and bearing between the pin and the hole. The tensile stress is

$$\sigma_t = \frac{F_v}{A} \quad (3)$$

where A is the cross-sectional area of the padeye plate (mm^2). The bearing stress, which is the compressive contact stress between the pin and the inner surface of the hole, is

$$\sigma_b = \frac{F_v}{tD} \quad (4)$$

where t is the thickness of the plate at the hole (mm) and D is the diameter of the pin hole (mm). The horizontal component produces shear in the plate between the hole and the base:

$$\tau = \frac{F_h}{A_s} \quad (5)$$

where A_s is the shear area (mm^2). The calculated stresses are compared with allowable stresses taken from the working stress design rules of AISC-ASD and API RP 2A-WSD, expressed as fractions of the yield strength F_y [17]:

$$\sigma_{t,all} = 0.6F_y, \quad \sigma_{b,all} = 1.2F_y, \quad \tau_{all} = 0.4F_y \quad (6)$$

For each check the ratio of actual to allowable stress is reported as a utilisation, and its inverse as a margin. A value of the utilisation below 100% means that the check is passed.

2.6 Finite Element Model

The finite element analysis was carried out in Abaqus to examine the stress distribution that the hand checks cannot resolve. The global model includes the main plate and the two cheek plates (Fig. 3). The material is S355 with the properties in Table 1, and a linear elastic response is assumed. The model units are millimetres and newtons, so stresses are in N/mm^2.

The thesis describes the mesh as six-node quadratic triangular shell elements of type S6R with an approximate global seed size of 3.5 mm. S6R elements have six degrees of freedom per node, include bending and membrane behaviour, and allow transverse shear deformation, which makes them suitable for thick shells. The mesh shown in Fig. 4 consists of hexahedral elements through the thickness.

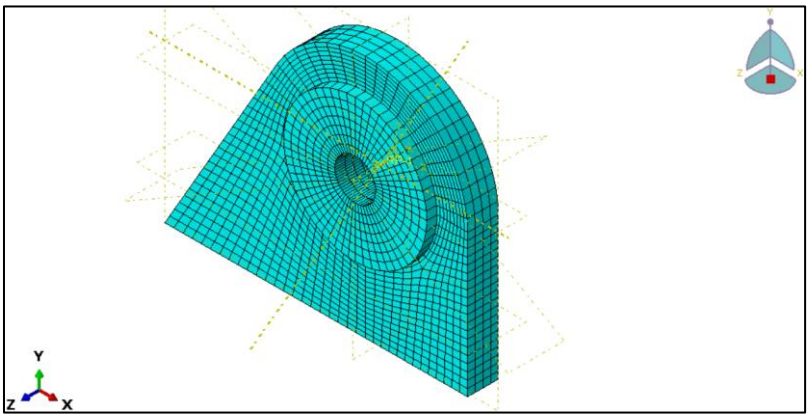

Figure 4: Finite element mesh of the padeye.

A fixed (encastre) boundary condition was applied along the base of the padeye, which restrains all translations and rotations and represents the welded connection to the manifold frame (Fig. 5). The load was applied at a reference point at the centre of the pin hole. The reference point is coupled kinematically to the inner face of the hole, so that the force is passed to the hole surface as a rigid-body connection (Fig. 5). The force is a concentrated load applied in a static, general step with a ramp amplitude, and its components are given in Table 4.

Table 4: Force applied at the reference point (Abaqus load definition)

Component	Value (N)
CF1 (X direction)	13,259.4
CF2 (Y direction)	22,965.2
CF3 (Z direction)	1,330

In-plane resultant of CF1 and CF2: 26,518 N, acting at 30.0° to the Y axis (arctan(13,259.4/22,965.2)); resultant of all three components: 26,551 N. Calculated here from the components.

The in-plane direction of the force, 30° from the Y axis, is equivalent to 60° from the X axis, which suggests that the 60° padeye angle in Table 2 is measured from the horizontal. The out-of-plane component CF3 is small compared with the in-plane components, at about 5% of the in-plane resultant.

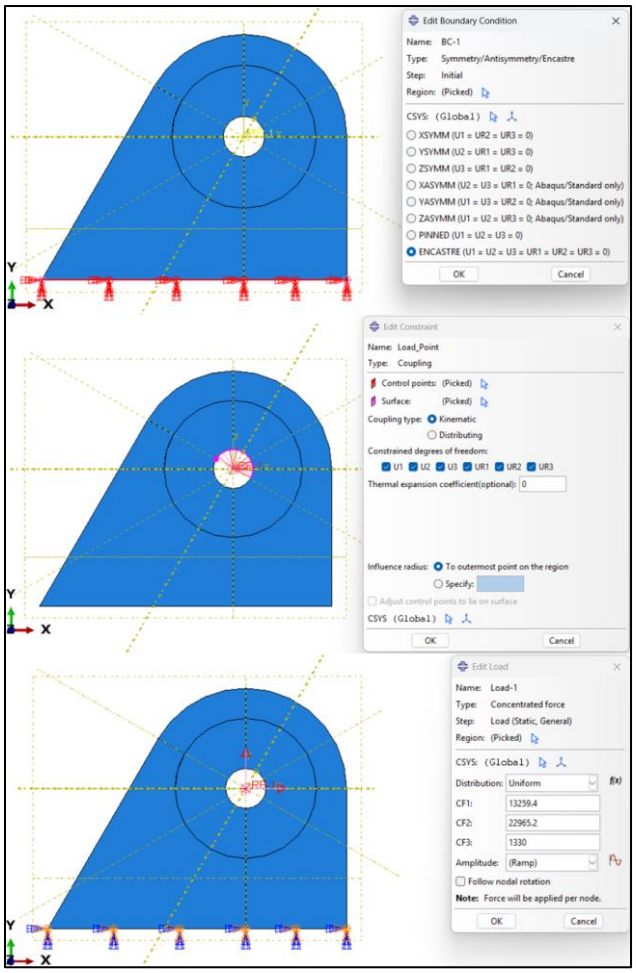

Figure 5: Abaqus model set-up: fixed boundary condition at the base, coupling of the reference point to the pin hole surface, and force applied at the reference point.

The outputs are the overall maximum von Mises stress, the maximum von Mises stress at the critical section S_a between the pin hole and the base, the maximum resultant displacement and the stress contours. The contour legends in the results show stress averaged at 75% across the elements, which is the default averaging threshold in Abaqus.

3 RESULTS

3.1 Analytical Design Results

The calculated stresses are all below their allowable values (Table 5). The tensile stress is 8.31 N/mm^2 against an allowable value of 213 N/mm^2 (0.6 × 355), a utilisation of 3.9%. The bearing stress is 64.76 N/mm^2 against 426 N/mm^2 (1.2 × 355), a utilisation of 15.2%. The shear stress is 60.88 N/mm^2 against 142 N/mm^2 (0.4 × 355), a utilisation of 42.9%. Expressed as margins, the allowable stress is 25.6 times the actual tensile stress, 6.58 times the bearing stress and 2.33 times the shear stress.

Table 5: Padeye design check against allowable stresses (AISC-ASD and API RP 2A-WSD)

Stress	Allowable (N/mm^2)	Actual (N/mm^2)	Utilisation (%)	Margin	Status
Tensile, σ_t	213 (0.6F_y)	8.31	3.9	25.6	Safe
Bearing, σ_b	426 (1.2F_y)	64.76	15.2	6.58	Safe
Shear, τ	142 (0.4F_y)	60.88	42.9	2.33	Safe

Allowable and actual stresses as reported in the thesis; utilisation and margin calculated here from those values.

The three utilisations are not equally distant from the limit. Tension in the plate is far from critical, while shear between the hole and the base has the least margin and governs the hand check. The allowable shear stress of 0.4F_y is lower

relative to the yield strength than the tensile and bearing allowables, and the shear component of the load is large because the sling is inclined. A padeye of this size would therefore reach its limit in shear before it did in tension or bearing if the load were increased.

3.2 Finite Element Results

Overall von Mises stress. The maximum von Mises stress in the model is 103.3 N/mm^2, located at the edge of the pin hole (Fig. 5; element MAIN-1.3645, node 1537). The stress is highest on the side of the hole where the load is transferred and decreases with distance from the hole, and most of the plate carries a much lower stress. The thesis lists the location of the peak as around the pin hole and the base weld. The contour in Fig. 5 shows the peak at the hole, and the stress near the base is influenced by the fixed boundary condition, since the weld itself is not modelled.

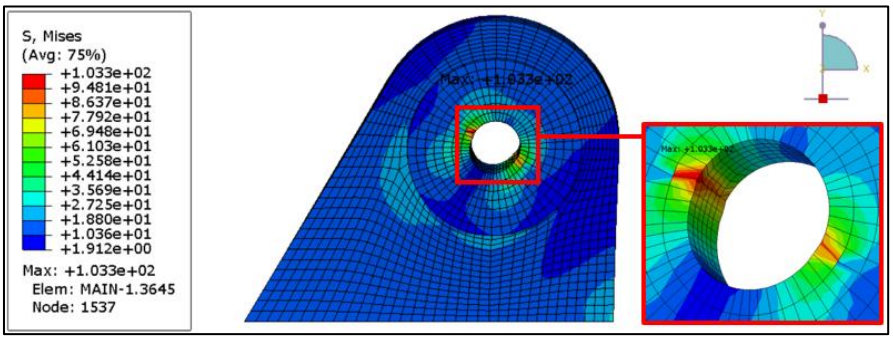

Figure 6: Von Mises stress (N/mm^2) in the padeye; maximum 103.3 N/mm^2 at the edge of the pin hole.

Stress at the critical section. The maximum von Mises stress at the section S_a between the pin hole and the base is 36.10 N/mm^2 at node 2152 (element MAIN-1.1691), and the minimum over the section is 5.40 N/mm^2 (Fig. 6). The stress is not uniform across the section. The highest values are along the upper longitudinal region, where the contour changes from yellow to orange and red, and the stress falls through green and cyan towards the opposite end. A smaller local increase appears near a lower corner of the end region, which can be linked to the geometry or to the constraint.

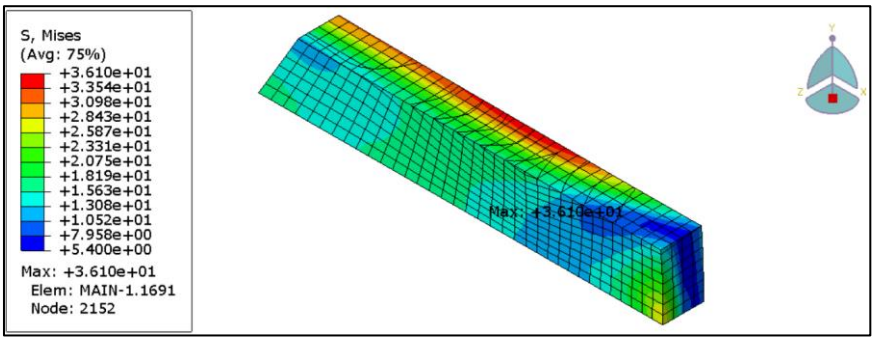

Figure 7: Von Mises stress (N/mm^2) at section S_a; maximum 36.10 N/mm^2, minimum 5.40 N/mm^2.

Displacement. The maximum resultant displacement is 0.05623 mm at the top edge of the padeye (Fig. 7; node 542). The displacement increases from zero at the fixed base to the maximum at the top, as expected for a cantilevered plate loaded at the pin hole. The deformation is very small compared with the dimensions of the padeye (120 mm high).

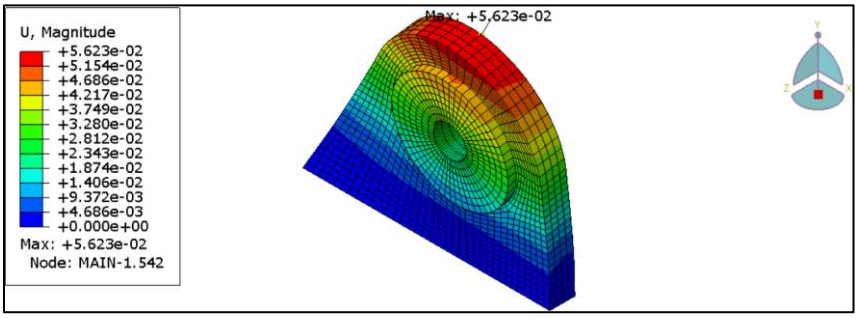

Figure 8: Resultant displacement (mm); maximum 0.05623 mm at the top edge.

Table 6: Summary of finite element results

Output	Value	Location	Ratio to F_y
Maximum von Mises stress	103.3 N/mm^2	Edge of pin hole (node 1537)	0.29
Maximum von Mises stress at S_a	36.10 N/mm^2	Between hole and base (node 2152)	0.10
Minimum von Mises stress at S_a	5.40 N/mm^2	–	0.015
Maximum resultant displacement	0.05623 mm	Top edge (node 542)	–

Values read from the Abaqus contour legends. Ratios to the yield strength of 355 N/mm^2 calculated here.

4 DISCUSSION

Meaning of the results. Both methods lead to the same conclusion about the padeye under the applied load. The hand checks show that the three nominal stresses stay below their allowable values, with the highest utilisation of 42.9% in shear. The finite element analysis shows that the peak von Mises stress of 103.3 N/mm^2 is 29% of the yield strength of 355 N/mm^2, a margin of about 3.4 against first yield (355/103.35), so the padeye does not yield. The finite element peak is a local value at the edge of the hole, whereas the hand checks give nominal values on assumed areas; the two are therefore not on the same basis and are not compared numerically here.

Stress concentration and the role of the cheek plates. The finite element peak of 103.3 N/mm^2 is higher than the nominal bearing stress of 64.76 N/mm^2. This is consistent with a local stress concentration at the hole, where the load passes from the pin into the plate. In the literature this region is identified as the most highly stressed part of a padeye, and cheek plates are used to thicken the plate around the hole, to spread the load and to reduce the concentration [10], [11]. The effect of the cheek plates was not isolated in this study, because no model without cheek plates was analysed.

Load direction. The force in the finite element model acts at 30° to the Y axis, and its horizontal component (13,259.4 N) is a little more than half of its vertical component (22,965.2 N). The inclined sling therefore loads the padeye in combined tension and shear, which is the reason why both components have to be checked [10]. The consequence of a larger inclination would be a larger horizontal component, which loads the section between the hole and the base in shear, and this is the check with the highest utilisation.

Relation to published work. Ali and Fadillah analysed a padeye on a 23.02 t subsea structure with a finite element model and reported a maximum stress of 131.835 MPa and a displacement of 0.12 mm at a 45° sling angle, with the structure safe against a yield strength of 345 MPa [8]. The stress and displacement in this study (103.3 N/mm^2 and 0.056 mm) are of the same order, and both studies find the padeye below yield. Liu et al. found by finite element analysis that padeye stress and deformation vary with the external force and the hoist angle [10], which agrees with the observation here that the inclination of the load determines the split between tension and shear. Soh and Soh noted that padeyes designed by traditional methods tend to be over-designed [17]. The low tensile and bearing utilisations in Table 5 would be consistent with this, but the present study does not include an optimisation, so no conclusion on over-design is drawn.

Table 7: Comparison with published padeye studies

Study	Approach	Reported finding
Soh and Soh [14]	2D and 3D finite element models of lifting padeyes	A 2D model suitable for practical design was identified; traditional design tends to over-design the padeye
Zhou et al. [15]	Check method based on frictionless cylindrical contact	New check formula compared with FEM and the traditional check formula
Liu et al. [7]	FEA and optimum design models	Stress and deformation vary with external force and hoist angle; steel cost minimised
Ali and Fadillah [8]	FEA of padeye on a 23.02 t subsea structure	Maximum stress 131.835 MPa and displacement 0.12 mm at 45°, below the 345 MPa yield
This study	Hand checks and Abaqus FEA of a manifold padeye	Maximum von Mises stress 103.3 N/mm^2 (29% of yield); displacement 0.056 mm

Practical implications. For the manifold installation, the results show that a padeye of the size in Table 2 is adequate for the applied load, with comfortable margins in tension and bearing and a smaller margin in shear. The designer should therefore watch the shear check and the sling angle first, because an increase in the load or in the sling inclination reduces the shear margin first. The stress concentration at the hole means that the hole edge and the cheek-plate connection are the regions to inspect and to protect from damage before the lift.

Limitations. The conclusion about adequacy applies only to the load used in the analysis. The padeye load is not documented from the design load in the source material (Section II-D), and it is based on the tether tension of 36,907 N and not on the peak sling tensions from the separate hydrodynamic analysis of the lift, which are much larger. The adequacy of the padeye for those peaks has therefore not been shown. In the model the weld between the padeye and the manifold is not represented, the base is fully fixed, the pin is a rigid coupling and not a contact, the analysis is linear elastic and static, and no mesh convergence study is reported. Fatigue, buckling and weld checks were not performed.

NOMENCLATURE

- A: cross-sectional area of the padeye plate (mm^2)
- A_s: shear area of the padeye plate (mm^2)
- C_p: distance from hole centre to padeye base (mm)
- CF: consequence factor
- D: pin hole diameter (mm)
- DAF: dynamic amplification factor
- E: Young's modulus (N/mm^2)
- F: force transmitted by the sling to the padeye (N)
- F_h: horizontal load component (N)
- F_v: vertical load component (N)
- F_y: yield strength (N/mm^2)
- G: shear modulus (N/mm^2)
- H_p: height of padeye (mm)
- L_p: length of padeye (mm)
- R_{ch}: cheek plate radius (mm)
- R_h: pin hole radius (mm)
- R_m: main plate radius (mm)
- S_a: critical section between the pin hole and the base
- t: plate thickness at the pin hole (mm)
- t_{ch}: cheek plate thickness (mm)
- t_p: main plate thickness (mm)
- WCF: weight contingency factor
- θ: sling angle from the vertical (degrees)
- ν: Poisson's ratio
- ρ: density (kg/m^3)
- σ_b: bearing stress (N/mm^2)
- σ_t: tensile stress (N/mm^2)
- τ: shear stress (N/mm^2)
- $Ø_p$: pin diameter (mm)

5 CONCLUSION

This paper assessed a cheek-plate reinforced S355 lifting padeye for the installation of a subsea manifold in conditions representative of the Egina field, using analytical checks and a finite element analysis. In the analytical design check, the tensile, bearing and shear stresses were 8.31, 64.76 and 60.88 N/mm^2, which are 3.9%, 15.2% and 42.9% of the allowable values, so the padeye passes all three checks and shear governs.

The Abaqus analysis gave a maximum von Mises stress of 103.3 N/mm^2 at the edge of the pin hole, which is about 29% of the yield strength of 355 N/mm^2. The stress at the critical section between the hole and the base was at most 36.10 N/mm^2, and the maximum displacement was 0.05623 mm at the top edge. The stress is concentrated at the pin hole and decreases away from it, as expected for a loaded padeye. The padeye is therefore adequate for the load applied in the model.

These conclusions depend on assumed design inputs and on a padeye load whose derivation from the design load is not documented. Within the scope of the two objectives, further work should document the design load, check the padeye

against the peak sling tensions of the lifting operation, model the pin contact and the weld, and report a mesh convergence study.

STATEMENTS ON COMPLIANCE WITH ETHICAL STANDARDS

Acknowledgments

Disclosure of conflict of interest

The authors declare no conflicts of interest regarding this manuscript.

REFERENCES

[1] Y. Bai and Q. Bai, "Subsea manifolds," in *Subsea Engineering Handbook*, Y. Bai and Q. Bai, Eds. Gulf Professional Publishing, 2010, pp. 571–632, doi: 10.1016/B978-1-85617-689-7.10019-6.

[2] Umana, E.C., Tamunodukobipi, D., & Inegiyemiema, M**.** (2021). Design of Mooring System for a floating production storage and offloading (FPSO) terminal*. Global Journal of Engineering and Technology Advance*. 07(01), 019-032 (https://gjeta.com/)

[3] Inegiyemiema, M., & Nitonye, Samson. (2015). Hydrodynamic analysis of a column structure of a petroleum storage tank, *International Journal of Scientific and Engineering Research, (IJSER).* 6 (1), ISSN 2229-5518 (http;/www.ijser.org)

[4] Inegiyemiema, M., & Odokwo, V. (2021). Preliminary Design of Dynamic Positioning system for a drillship*. American Journal of engineering Research.*10(02), 52-60 (www.ajer.org)

[5] R. G. Pestana, D. F. de Carvalho e Silva, C. N. Gomes, L. O. Carvalho, V. Vileti and P. de Tarso, "Subsea manifold installation: Operational windows estimation based on hydrodynamic model testing," *Ocean Engineering*, vol. 219, 108364, 2021, doi: 10.1016/j.oceaneng.2020.108364.

[6] L. Shi, Y. Jiang, X. Ju, Y. Gu and W. Fang, "Study on key techniques of deepwater subsea manifold design," *Ocean Engineering Equipment and Technology*, vol. 5, no. 2, pp. 138–142, 2018, doi: 10.12087/oeet.2095-7297.2018.02.12.

[7] E. M. de Andrade, D. O. Costa, A. C. Fernandes and J. S. Sales Junior, "A review on the modeling of subsea lifting operations," *Ocean Engineering*, vol. 268, 113293, 2023, doi: 10.1016/j.oceaneng.2022.113293.

[8] Offshore Magazine, "Nigerian-built manifold structures delivered to Egina field," 2017. [Online]. Available: https://www.offshore-mag.com/subsea/article/16800903/nigerian-built-manifold-structures-delivered-to-egina-field

[9] TechnipFMC, "Installation of 6 manifold modules for Total's Egina project in Nigeria," 2017. [Online]. Available: https://www.technipfmc.com/en/media/news/2017/10/installation-of-6-manifold-modules-for-total-s-egina-project-in-nigeria/

[10] Z. C. Liu, B. Zhou and S. K. Tan, "Finite element analysis and structure optimum design of lifting padeye," *Advanced Materials Research*, vol. 658, pp. 399–403, 2013, doi: 10.4028/www.scientific.net/AMR.658.399.

[11] M. Ali and A. Fadillah, "Analysis of lifting strength of padeye subsea structure using finite element method," *Int. J. Marine Engineering Innovation and Research*, vol. 9, no. 1, pp. 193–199, 2024, doi: 10.12962/j25481479.v9i1.5068.

[12] Y. Wang, H. Tuo, L. Li, Y. Zhao, H. Qin and C. An, "Dynamic simulation of installation of the subsea cluster manifold by drilling pipe in deep water based on OrcaFlex," *J. Petroleum Science and Engineering*, vol. 163, pp. 67–78, 2018, doi: 10.1016/j.petrol.2017.12.049.

[13] X. Li, X. Wang, J. Liu and X. Yang, "A study on the controllability of deepwater manifold during launch through pendulous installation method," *Advanced Materials Research*, vols. 490–495, pp. 1992–1996, 2012, doi: 10.4028/www.scientific.net/AMR.490-495.1992.

[14] B. Nam, N. Kim, Y. Choi, S. Y. Hong and J. Kim, "A model test for deepwater lifting and lowering operations of a subsea manifold," *Int. J. Offshore and Polar Engineering*, vol. 26, no. 3, pp. 263–271, 2016, doi: 10.17736/ijope.2016.mk49.

[15] H. Liu and J. Wang, "Numerical evaluation of a subsea equipment installation method designed to avoid resonant responses," *Applied Ocean Research*, vol. 88, pp. 196–208, 2019, doi: 10.1016/j.apor.2019.03.025.

[16] N. Ullah, M. Duan, M. D. U. Onuoha, A. Syed, M. Sajid, G. Sun and W. Li, "Multibody constrained dynamics of deepwater Y-method installation system," *Ocean Engineering*, vol. 278, 114482, 2023, doi: 10.1016/j.oceaneng.2023.114482.

[17] A.-K. Soh and C.-K. Soh, "Design and analysis of offshore lifting padeyes," *J. Constructional Steel Research*, vol. 14, no. 3, pp. 167–180, 1989, doi: 10.1016/0143-974X(89)90071-0.

[18] B. Zhou, Y. Liu and Z. Ji, "A new check method of lifting padeyes based on frictionless cylindrical contact theory," *J. Ship Production*, vol. 25, no. 1, pp. 1–6, 2009, doi: 10.5957/jsp.2009.25.1.1.

[19] BS EN 10025-2:2004, *Hot rolled products of structural steels. Part 2: Technical delivery conditions for non-alloy structural steels*. British Standards Institution, 2004.

[20] AISC-ASD and API RP 2A-WSD. [REFERENCE DETAILS REQUIRED: edition and clause for the allowable stress factors.]